30+ YEARS OF WIPRO LIGHTING

wipro lighting

Crest

LED Bollard

Step into a world of

soothing illumination

Introducing Crest LED Bollard, an advanced lighting solution providing a glare-free, symmetric light distribution, made for accentuating the beauty of your surroundings. Weather-proof and extremely durable, Crest makes for the perfect solution for your walkways and landscapes.

- 50,000 Hrs LED life with L70 criteria
- IP65 rating
- Aluminium housing
- Meets the standards of IS 10322 part 5/Sec 3, 2012

Crest
LED Bollard

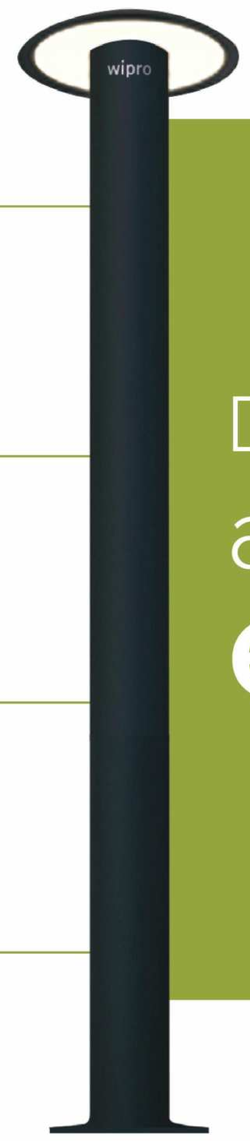

Designed for
a **serene** outdoor
experience

More light on walkways
Symmetric glare-free light distribution with a polycarbonate diffuser

Unmatched durability
Weather-proof and rust-free luminaire with pure polyester powder coating

Lightweight luminaire
Aluminum casted housing for excellent heat dissipation

Ideal green lighting
High-efficacy LEDs for optimum energy consumption

Fast and easy installation
Potted driver and accessories pre-wired up to terminal block

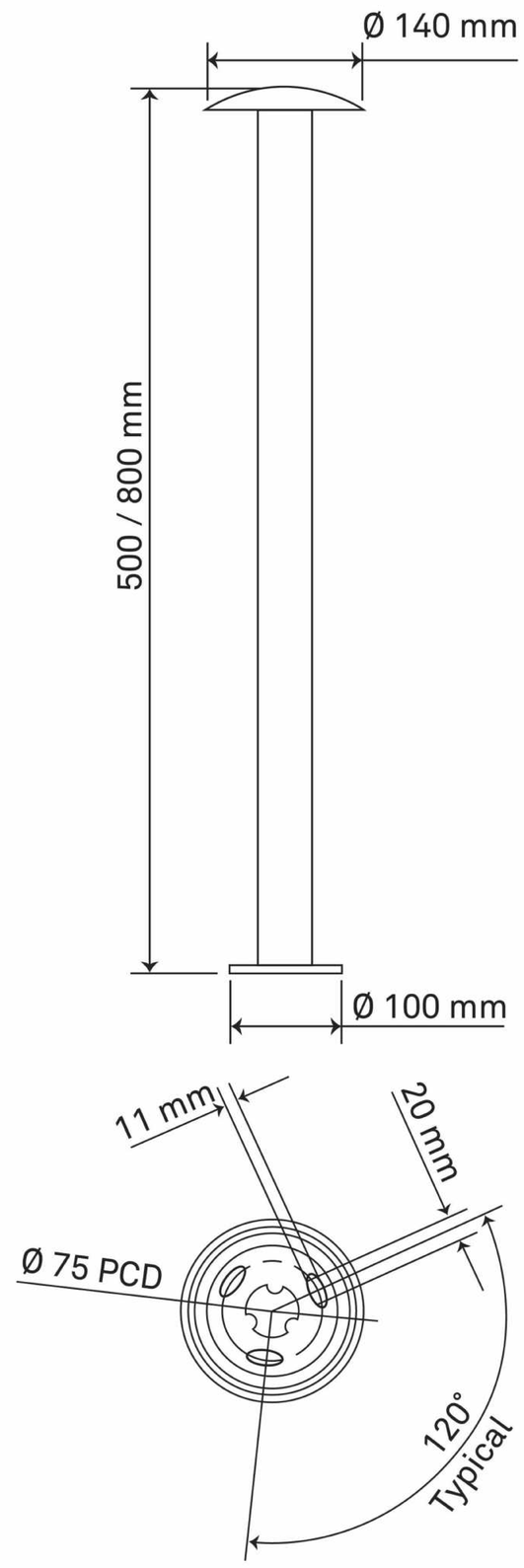

All dimensions are in mm
Tolerance of +/-5 mm

APPLICATION AREAS

Walkways | Patios | Landscapes | Driveways

ELECTRICAL DATA

Product Main Code	*System Wattage (W)	Rated Voltage (V)	*Mains Current (A)	Approx. Weight (Kg)	Case Lot (Nos)
LB15-111-XXX-57-05	8	240	0.035	1.0	4
LB15-111-XXX-40-05	8	240	0.035	1.0	4
LB15-131-XXX-57-05	11	240	0.048	1.0	4
LB15-131-XXX-40-05	11	240	0.048	1.0	4
LB15-111-XXX-57-08	8	240	0.035	1.3	4
LB15-111-XXX-40-08	8	240	0.035	1.3	4
LB15-131-XXX-57-08	11	240	0.048	1.3	4
LB15-131-XXX-40-08	11	240	0.048	1.3	4

*Rated system wattage and current will have tolerance as per is 16104: 2012

wipro lighting

www.wiprolighting.com | Toll free no: 1800 425 1969 | helpdesk.lighting@wipro.com

Registered Office: Wipro Enterprises (P) Ltd. 'Wipro House', No. 8, 7th Main, 80 Feet Road, Koramangala, 1st Block, Bangalore 560034

Business Office: Wipro Lighting, 5th Floor, Godrej Eternia-C, Old Pune-Mumbai Highway, Shivajinagar, Pune 411005
(T) 020 66098700, (F) 020 66098777

Branches: Ahmedabad | Bangalore | Baroda | Bhubaneshwar | Chandigarh | Chennai | Cochin | Coimbatore | Hyderabad | Indore | Jaipur | Kolkata Lucknow | Mumbai | Nagpur | New Delhi | Pune | Raipur | Vishakhapatnam

Innovation and improvement are a way of life at Wipro, All rights reserved. Reproduction of this data in parts or in whole, without permission, is prohibited. Care has been taken to ensure that the information content within is correct. We reserve the right to modify the product without prior intimation. Imitation of Registered Designs is a punishable offence.

Follow us on